Direction Of Rotation

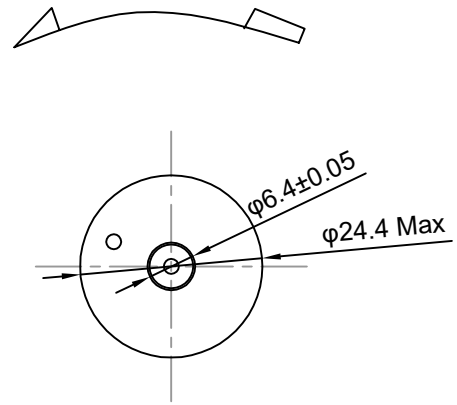

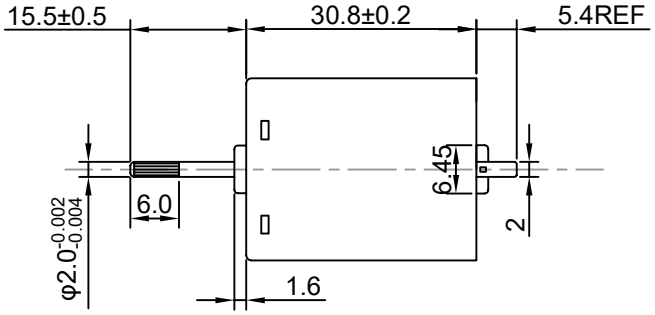

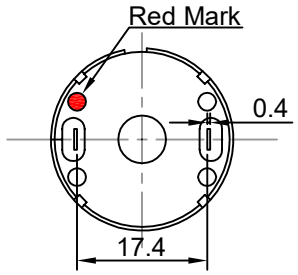

12V:
No load speed: 2750RPM±10%RPM
No load current: 15mA Max
Stall current: 250mA Max
24V:
No load speed: 5400RPM±10%RPM
No load current: 30mA Max
Stall current: 450mA Max

No.	Item	Specification	No.	Item	Specification
1	Rated Voltage	18V DC	7	Stall Current	350mA Max
2	Voltage Range	3-30V DC	8	Start Voltage	3.0V
3	No Load Current	18mA Max	9	Stall Torque	90g.cm Min
4	No Load Speed	4070±10%RPM	10	Shaft end play	0.05-0.2mm
5	Rated Load Current	80mA Max			
6	Rated Load Speed	3100±10%RPM			

Drawn	Tony	05/21/2025	Unit: mm
Checked	Eva	05/21/2025	Kysan Electronics
Eng Appr.			www.kysanelectronics.com
Mfg Appr.			
Q.A.			
SKU: 1112788			Siae: A4 / Scale / Weight(Kg):

Graph drawing

Sample No: 0 Customer 0 Date: 2025/4/30

Model:

——— Efficiency

------ Power output

NOTE: Performance(in an ambient temperature of 25-30°C)
Motor tested rapidly to prevent significant temperature rise.

V	P	I	N
71	1.29	0.36	4884
48	0.86	0.24	3256
24	0.43	0.12	1628
0	0	0	0
Eff. (%)	Power (W)	Current (A)	Speed (RPM)

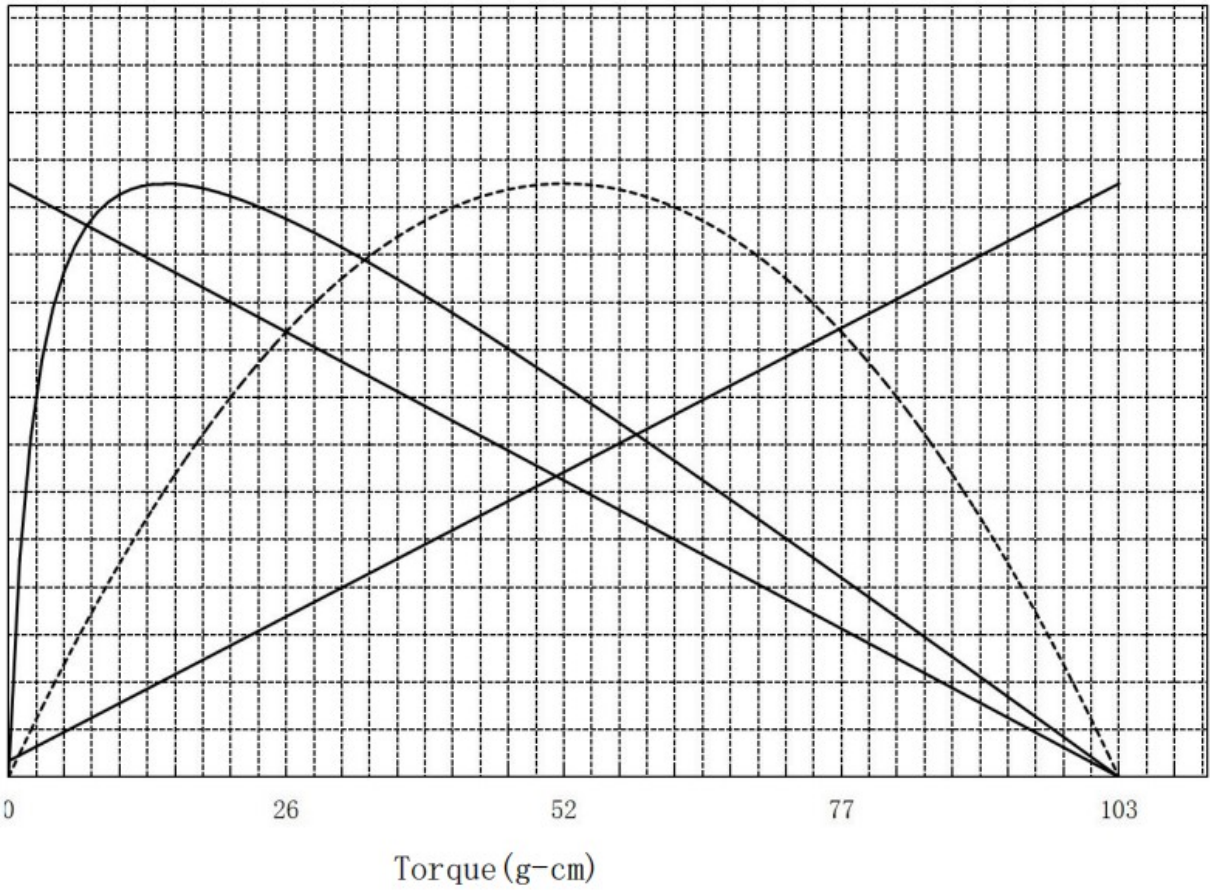

Constant voltage : 18.0 Volts

Direction: CW / CCW

At No Load

Speed: 4070 rpm

Current: 0.008 A

At stall(Extrapolated)

Torque: 103.0 g-cm

Current: 0.30 A

At maximum efficiency

Efficiency: 59.5 %

Torque: 14.4 g-cm

Speed: 3405 rpm

Current: 0.05 A

Output: 0.50 W

At maximum Power output

Output: 1.08 W

Torque: 51.5 g-cm

Speed: 1692 rpm

Current: 0.15 A

Issued by QA Reliability Testing Center

COMPUTER PRINT-OUT

NOMINAL MOTOR CURVES

Performance and characteristics are measured based on limited motor samples only