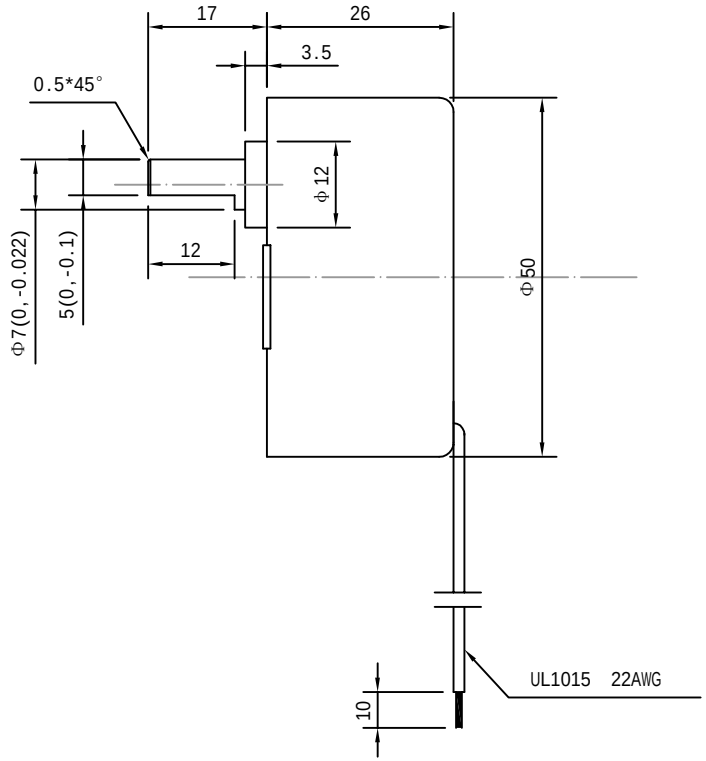

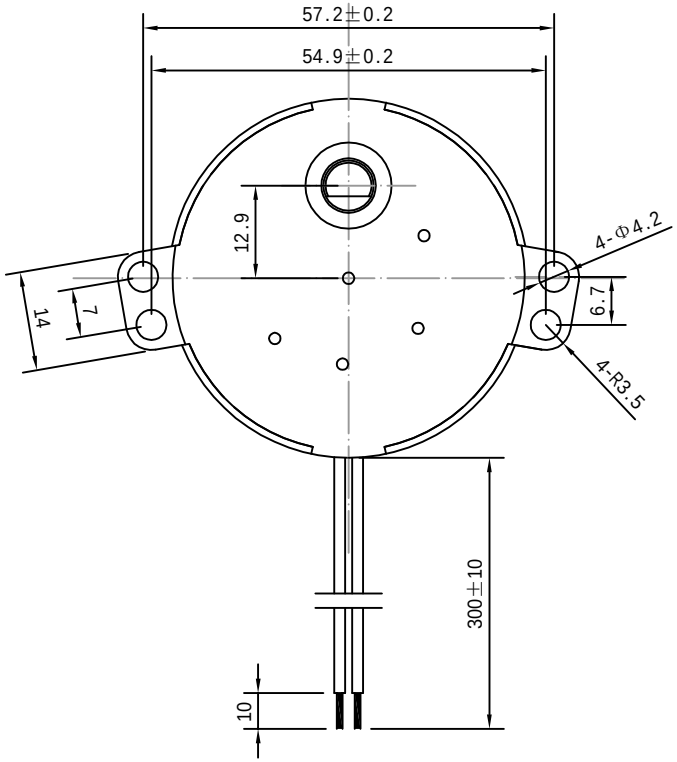

No.	Item	Specification	No.	Item	Specification
1	Rated Voltage	220V AC 50Hz	7		
2	Output Speed	2.5RPM	8		
3	Input Power	≤4W	9		
4	Input Current	≤25mA	10		
5	Rated Torque	≥12Kgf.cm	11		
6	Direction Of Rotation	CW/CCW			

Drawn	Bruce	09/14/2023	Unit: mm
Checked	Eva	09/14/2023	Kysan Electronics
Eng Appr.			www.kysanelectronics.com
Mfg Appr.			
Q.A.			
SKU: 1311296			Size :A4 / Scale : / Weight(Kg):