KYSAN ELECTRONICS

DC Axial Fan

TFB(S)12025H(M/L)24

Features

Size:120 x 120 x 25mm(4.72 x 4.72 x 1.00in)
Frame/Impeller: Reinforced Plastic UL94V-0
Bearings: Ball Bearing & Sleeve Bearing
Life Expectancy:50,000 Hours at 20℃ -Ball
30,000 Hours at 20℃ -Sleeve
Approvals: CE RoHS
Weight: 126g

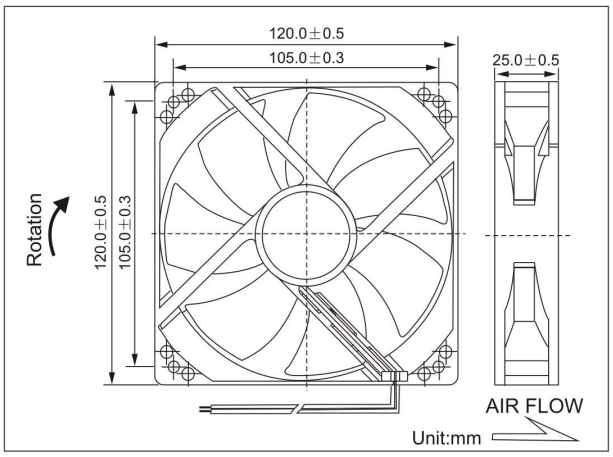

Air Flow vs Air Pressure

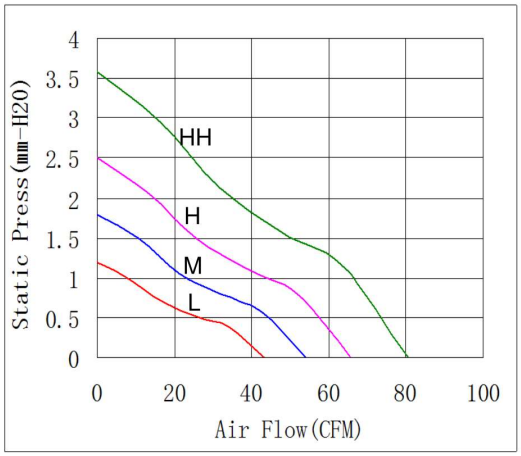

Performance

Model	Bearing System		Rated Voltage	Current	Input Power	Nominal Speed	Air Flow	Air Pressure	Noise
	S	B	(VDC)	(A)	(W)	(R.P.M)	(CFM)	(mm-H_2O)	(dBA)
TFB(S)12025L12	√	√	12	0.07	0.84	1200	43.23	1.19	21.4
TFB(S)12025M12	√	√	12	0.13	1.56	1500	54.05	1.8	27.4
TFB(S)12025H12	√	√	12	0.19	2.28	1800	65.63	2.51	32.5
TFB(S)12025HH12	√	√	12	0.35	4.20	2200	80.49	3.58	38.5
TFB(S)12025L24	√	√	24	0.08	1.92	1500	54.05	1.53	27.4
TFB(S)12025M24	√	√	24	0.12	2.88	1800	65.63	2.54	32.5
TFB(S)12025H24	√	√	24	0.23	5.52	2200	80.49	1.19	38.5

Product specification contained herein maybe changed without prior notice
It is there fore advisable to contact Kysan before proceeding with the design of equipment incorporating this product

Kysan Electronics Inc.
2570 North First Street Suite 220, San Jose California 95131, United States
Phone: 408-324-1638 Fax: 408-324-1665